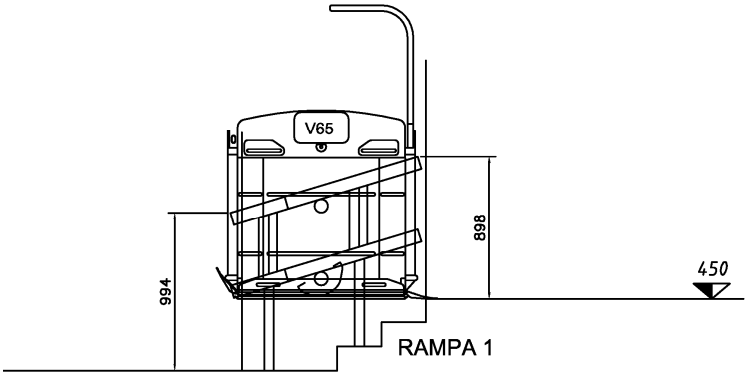

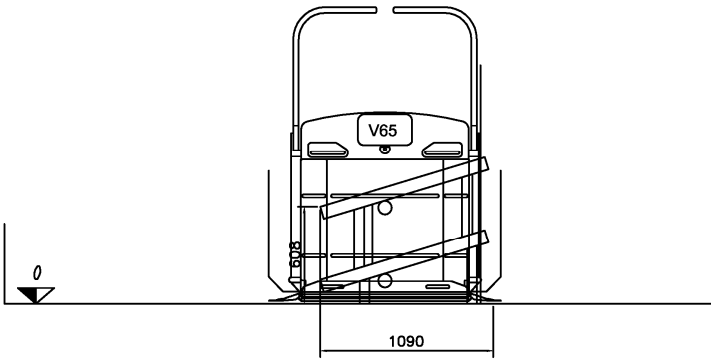

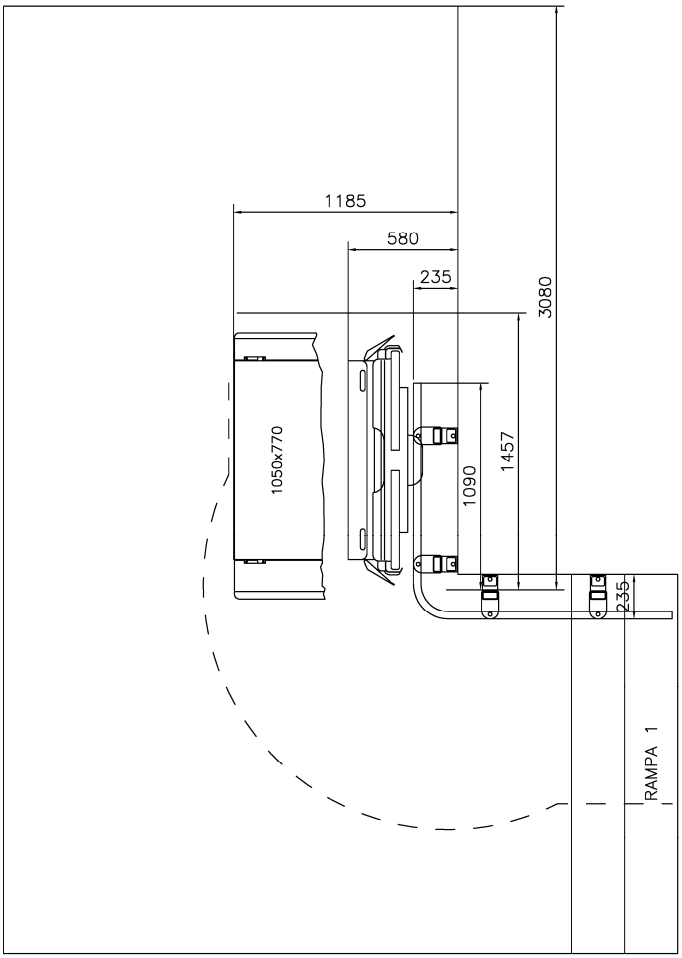

VIA PARRI, 7 – 42045 LUZZARA (RE) Tel: 0522/970666 r.a. – Fax: 0522/970919
C.F. 00596150201 – P.I. 00758850358